INDUSTRIAL AIR FILTRATION

ESPi / MFi RANGE

600 | 1000 | 2000 | 4000 | CENTRALISED

purified air®

INDUSTRIAL AIR FILTRATION EXPERTS

Purified Air Ltd. has been manufacturing market leading air filtration technology since 1984.

CONTENTS

INDUSTRIAL PROCESSES

Our solutions are ideal for applications involving neat oils and emulsions. Machining processes, combined with coolant use, generate submicron particulate matter – either through atomisation or as a byproduct of the cutting process. These systems are particularly suited to high-precision machine tool manufacturers.

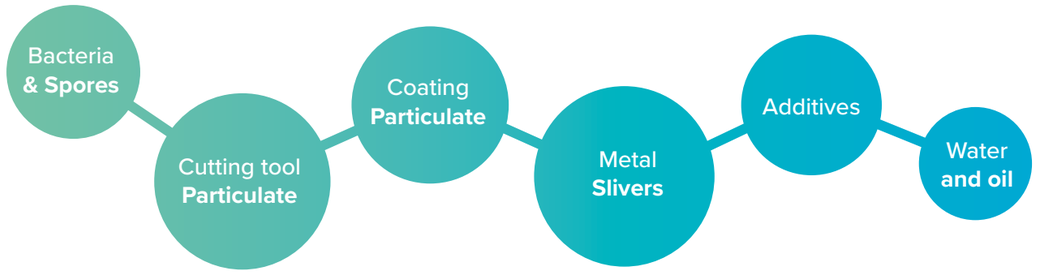

APPLICATIONS

- Sliding heads
- Gun Drill
- Gear hobbing
- Welding
- Grinding
- Die Casting

Most other neat oil applications are ideal for Electrostatic Precipitation (ESP)

OIL | OIL MIST | FUMES

MACHINE MOUNTED

ESPi 600/1000

ELECTROSTATIC PRECIPITATOR

Our Oil Mist Units features a double-pass ESP technology and is efficient at 99%. Due to their compact size and built in fan system, they can be directly mounted to a machine tool.

Specifically designed for the industrial market, this compact unit generates low vibrations, making it ideal for mounting onto fine finishing or high-pressure/neat oil machine tools.

A highly efficient oil, mist and smoke collector is effective on all metalworking fluids.

KEY FEATURES

- Filters particles down to sub-micron levels
- Specifically designed for industrial application
- Tested to 99% efficiency
- Energy efficient
- Low operating costs
- Removes oil, mist and smoke
- Minimal maintenance required
- Compact design

HOW IT'S INSTALLED

Installations will be directed by the customer and can be either:

01 **Direct mounted** with plenum

02 **Side Mounted** with plenum and gallows bracket

03 **Stand mounted** with plenum separate

Note: Purified Air do not recommend direct mounting

FILTERS REMOVE

Fumes

Oil

Mist

THE ELECTROSTATIC PROCESS

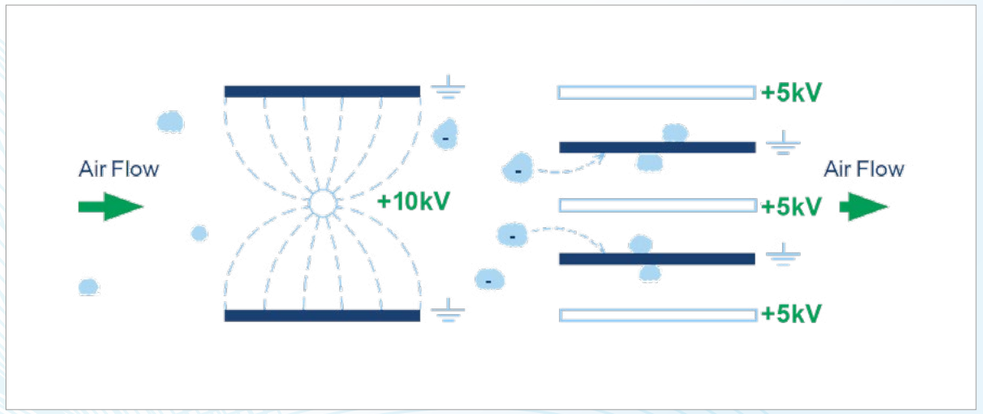

The above diagram shows, in a basic visual, how an electrostatic precipitator works:

As air passes into the combined ioniser / collector cell, the particulates in the air stream are polarised. As they continue through the ioniser and between the collector cell plates, the polarised particulates are repelled away from the positively charged plates and attracted to the earthed plates where they stick and so are filtered out of the air flow.

THE BENEFITS OF ELECTROSTATIC TECHNOLOGY

- Eliminates 99% of particles
- Filters particles down to sub-micron levels
- Compact design
- Energy efficient

OUR SERVICES

Design

Manufacture

Maintain

TECHNICAL SPECIFICATION

	ESPI 600	ESPI 1000
Electrical Supply	220/240V / 1 / 50-60Hz	220/240V / 1 / 50-60Hz
Max Air Volume	up to 600m³/h	up to 1000m³/h
Max Power Consumption	230w	280w
Dimensions (mm)	W 625 mm	W 625 mm
	H 420 mm	H 600 mm
	D 389 mm	D 389 mm
Weight (kg)	30kg	41kg

DRAWINGS

ESPi 600

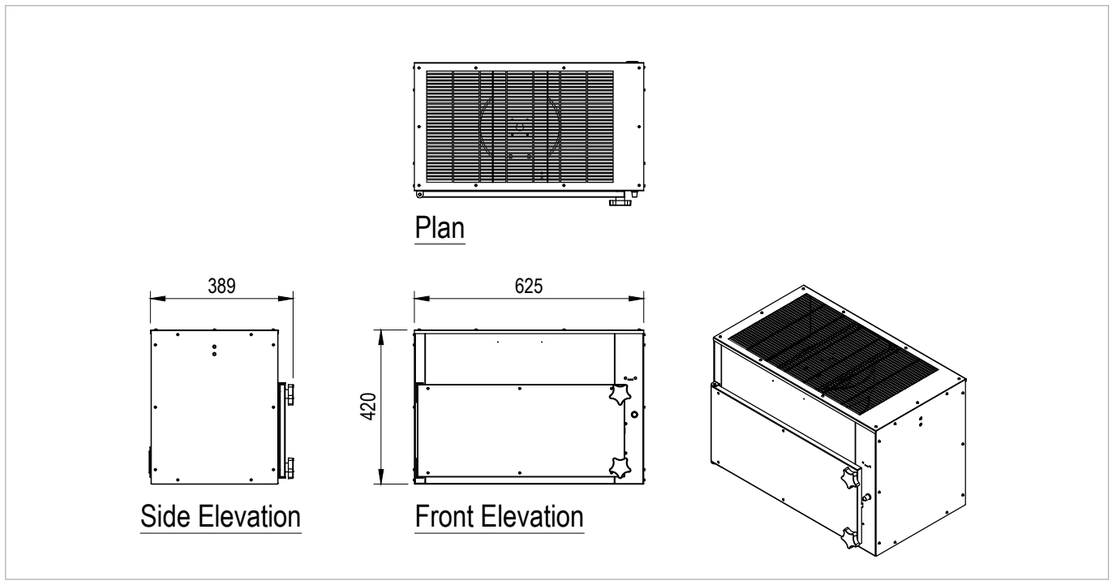

ESPi 1000

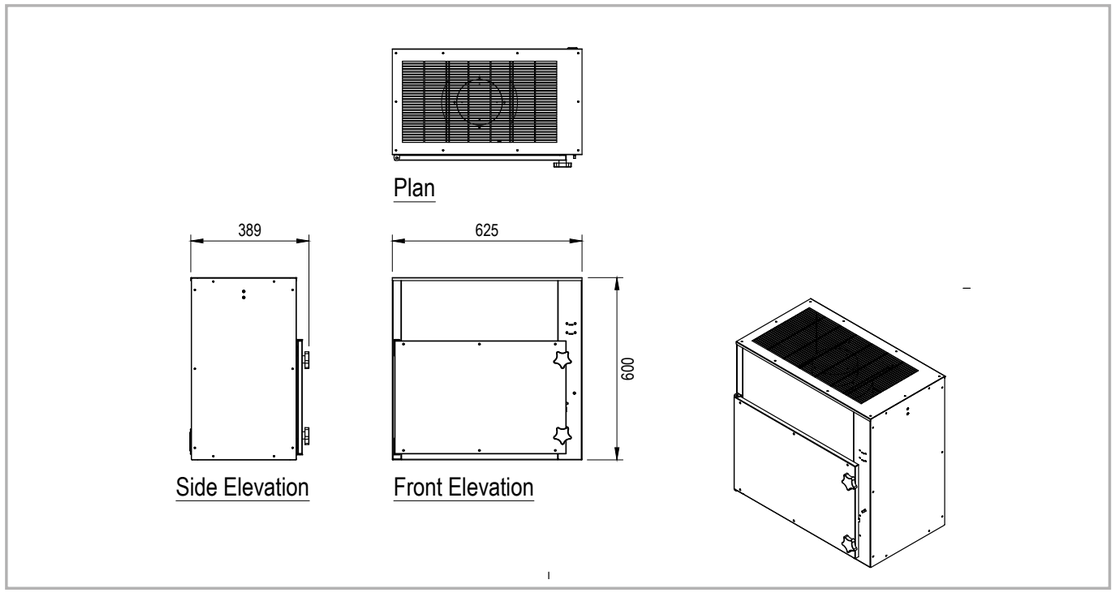

PLENUM

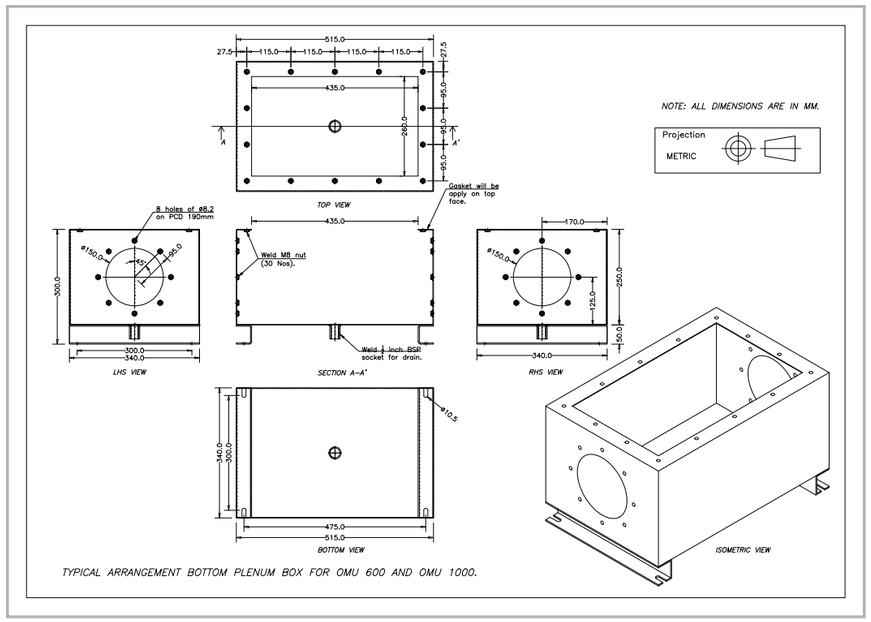

OIL | OIL MIST | FUMES

MACHINE MOUNTED

ESPi 2000/4000

ELECTROSTATIC PRECIPITATOR

Our Electrostatic Precipitators, or ESPs, are up to 99% efficient. Due to their modular design and built-in fan system, the units can be mounted on a machine tool, on a freestanding stand or via a transition to allow for venting to the atmosphere.

Specifically designed to work with more significant airflow volumes of larger high-pressure neat oil machines, this highly efficient oil mist, smoke, and fume collector is effective in most manufacturing processes.

KEY FEATURES

- Filters particles down to sub-micron levels
- Tested to 99% efficiency
- Low operating costs
- Minimal maintenance required
- Specifically designed for industrial application
- Energy efficient
- Removes oil, mist and smoke
- Compact design

HOW IT'S INSTALLED

Installations will be directed by the customer and can be either:

01 **Side Mounted** with gallows bracket

02 **Stand mounted** separate

2000/4000 unit can only be directly mounted on larger machinery.

Note: Purified Air do not recommend direct mounting.

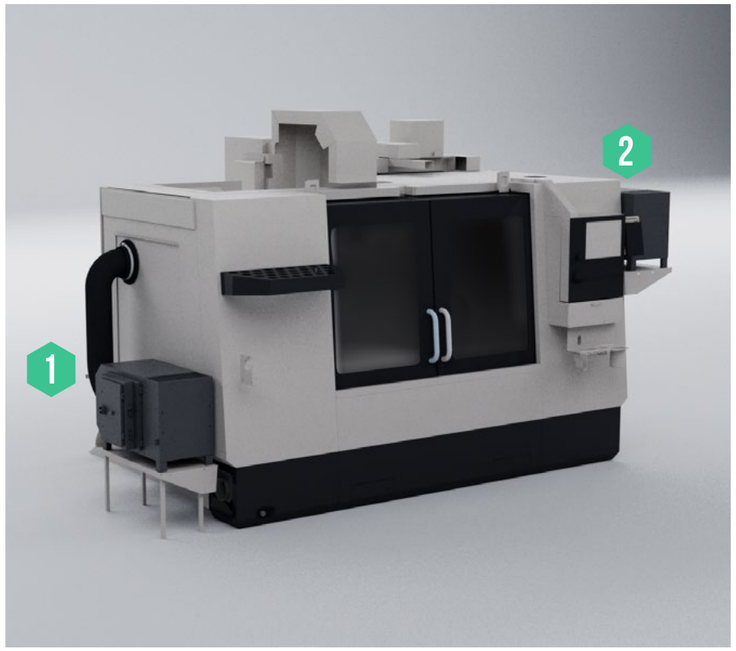

FILTERS REMOVE

Fumes

Oil

Mist

THE ELECTROSTATIC PROCESS

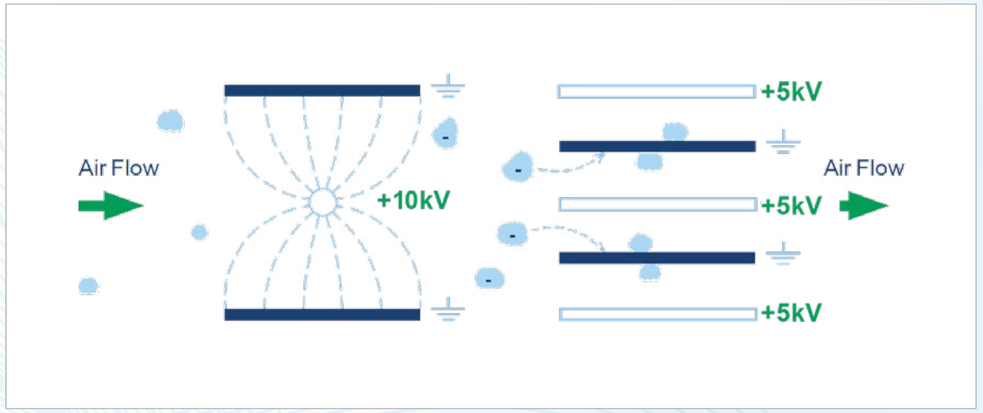

The above diagram shows, in a basic visual, how an electrostatic precipitator works:

As air passes into the combined ioniser / collector cell, the particulates in the air stream are polarised. As they continue through the ioniser and between the collector cell plates, the polarised particulates are repelled away from the positively charged plates and attracted to the earthed plates where they stick and so are filtered out of the air flow.

THE BENEFITS OF ELECTROSTATIC TECHNOLOGY

- Eliminates 99% of particles
- Filters particles down to sub-micron levels
- Compact design
- Energy efficient

OUR SERVICES

Design

Manufacture

Maintain

TECHNICAL SPECIFICATION

	ESPI 2000	ESPI 4000
Electrical Supply	220/240 / 1 / 50-60Hz	220/240 / 1 / 50-60Hz
Max Air Volume	up to 2000m³/h	up to 4000m³/h
Max Power Consumption	540w	1080w
Dimensions (mm)	W 609 mm	W 1123 mm
	H 670 mm	H 670 mm
	D 1081 mm	D 1124 mm
Weight (kg)	66kg	132kg
	Double Pass available	

DRAWINGS

ESPi 2000

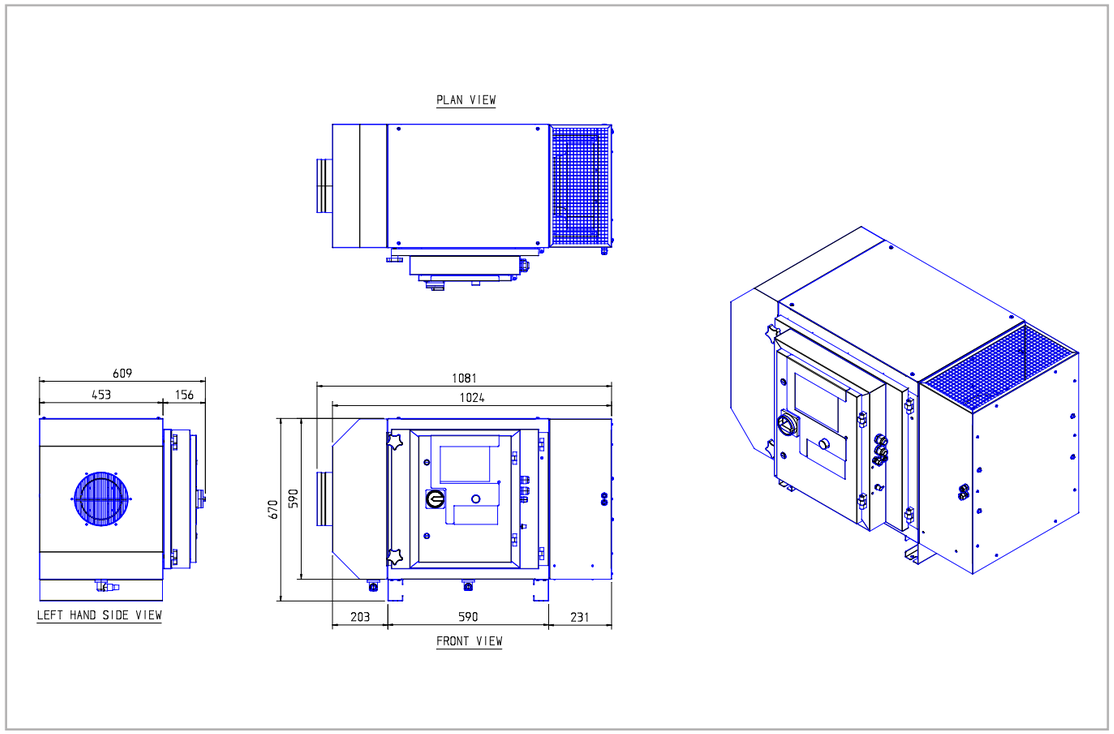

ESPi 4000

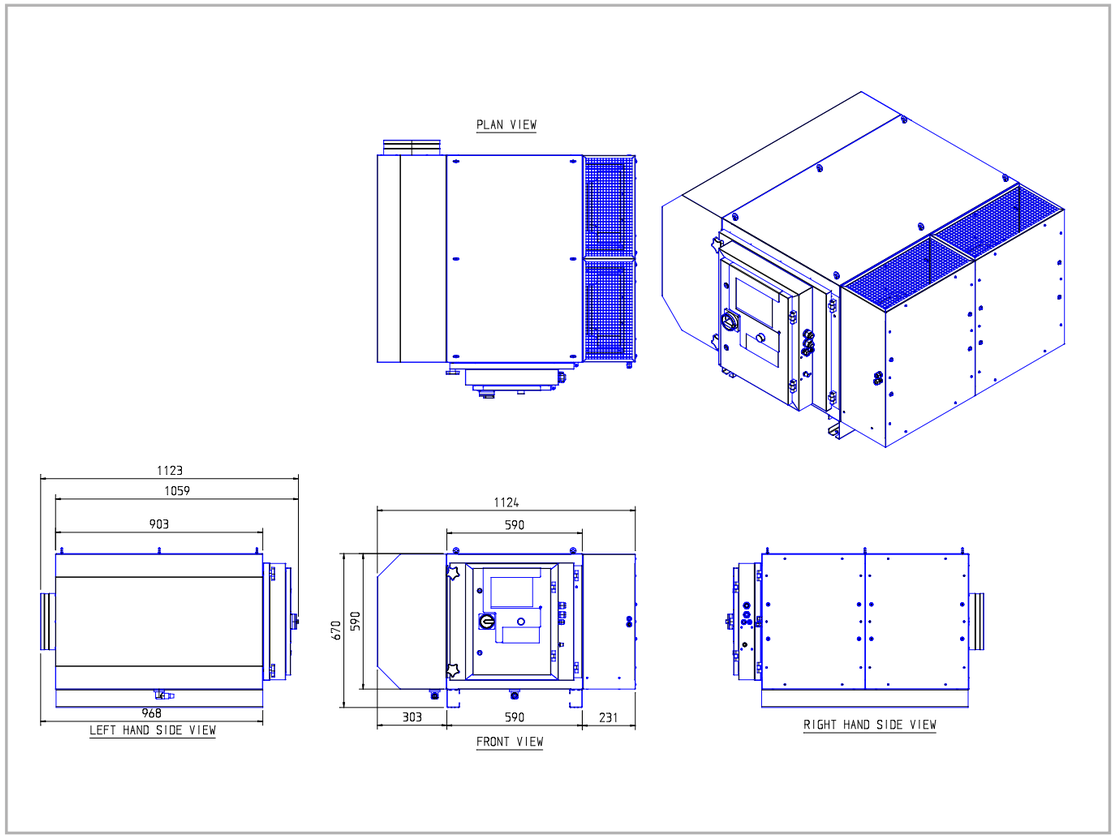

OIL | OIL MIST | FUMES

IN-DUCT

ESP CENTRALISED

ELECTROSTATIC PRECIPITATOR

1500 | 3000 | 4500 | 6000

Our Electrostatic Precipitators, or ESPs, are ideally suited to larger volumes of smoke, fumes and oil mist. The unit's sizeable modular capacity can be configured from 2500m³/h up to 60,000m³/h. They are IP65-rated and have a built-in sump and drain point.

Access doors and replaceable components enable them to be serviced easily and quickly, reducing workshop downtime. In addition, systems can be configured to remove odour control to offer greater comfort within the workshop or industrial environment by lowering the contaminated air that is exhausted into the atmosphere.

Our products are compact, energy-efficient and affordable for small workshops (cellular) but scalable for large turnkey projects (centralised), delivering a significant ROI.

KEY FEATURES

- Eliminates up to 98% of oil mist, fumes and smoke particles
- Suited for large air volumes
- Filters particles down to sub-micron levels
- Designed with an integral sump
- Modular in design
- Designed for industrial application
- Energy efficient: uses 20–50W
- Quick and easy service access reducing workshop down time
- IP65 rated for outside location

HOW IT WORKS

Our ESP units fit in-line with the workshop ducting and can be configured modularly to cope with all extract volume requirements.

01 Smoke, fumes and oil mist particulates

02 Air drawn up through the ducting

03 ESP - Particulate Control Unit

04 Purified air drawn out to exhaust

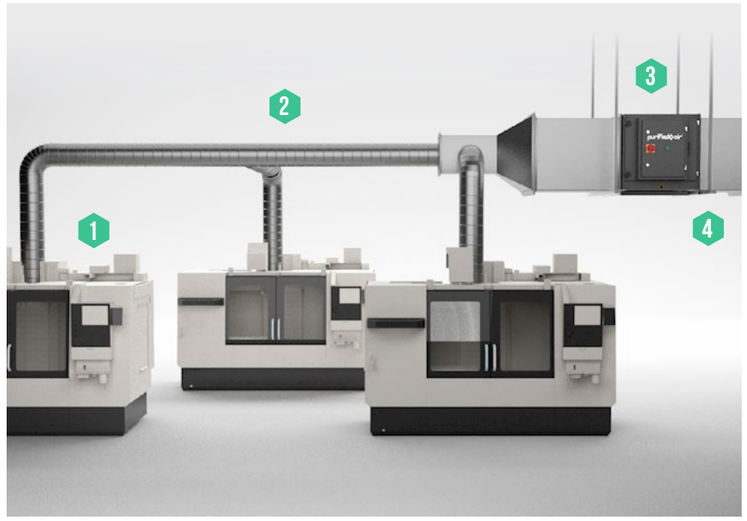

TECHNICAL SPECIFICATION

	ESP 1500	ESP 3000	ESP 4500	ESP 6000
Electrical Supply	220/240V / 1 / 50-60Hz			
Max Air Volume	Up to 2520 m³/h	Up to 5040m³/h	Up to 7560m³/h	Up to 10080m³/h
Max Power Consumption	20w	30w	40w	50w
Dimensions (mm)	W 450 mm	W 900 mm	W 1350 mm	W 1800 mm
	H 630 mm	H 630 mm	H 630 mm	H 630 mm
	D 640 mm	D 640 mm	D 640 mm	D 640 mm
Weight (kg)	55kg	85kg	118kg	153kg

THE ELECTROSTATIC PROCESS

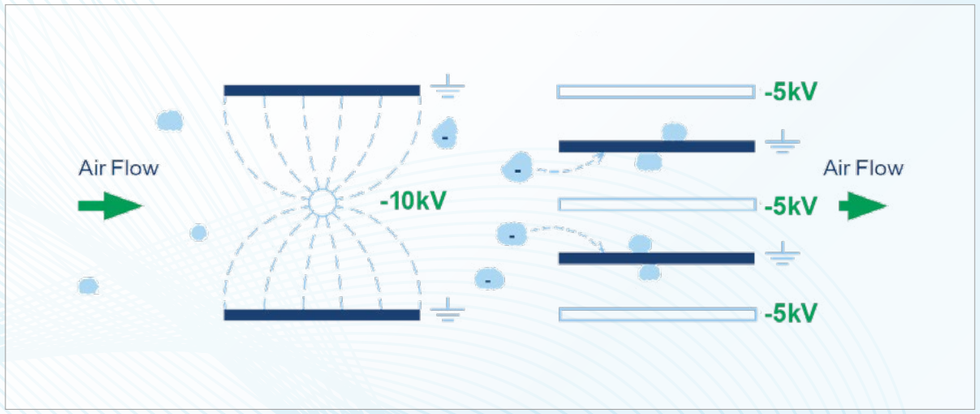

The above diagram shows, in a basic visual, how an electrostatic precipitator works:

As air passes into the combined ioniser / collector cell, the particulates in the air stream are polarised. As they continue through the ioniser and between the collector cell plates, the polarised particulates are repelled away from the negatively charged plates and attracted to the earthed plates where they stick and so are filtered out of the air flow.

THE BENEFITS OF ELECTROSTATIC TECHNOLOGY

- Eliminates up to 99% of particles
- Filters particles down to sub-micron levels
- Modular design
- Energy efficient

SCALABLE SOLUTIONS

Our air filtration systems are designed with scalability in mind, offering a flexible solution that can grow with your needs.

Our modular approach to a solution was borne out of necessity, many building in the UK are just to small to accommodate large cumbersome AHU's, Pollution Control units or even large Filter systems.

Our airflow ranges from 600m^{3}hr > 160,000m^{3}hr, our product ranges combine multiple technologies that work independently or collectively to create a customer centric solution. This enables you to vent clean air back to the outside atmosphere or give the option to recirculate back into the Workspace.

TECHNOLOGIES

ESP **Electrostatic Precipitators**
UV-C **Ultraviolet (Odour)**
Media Filters
Carbon | Panel | Bag | HEPA

APPLICATIONS INCLUDE:

Fumes (submicron)
Odours
Oilmist
Smoke

Multi-Stage Filtration Examples

Max Air Flow: 6000cfm
up to 99% efficiency

6 x ESP 3000

3 x ESP 3000 | 6 x MFU 1800

DUST | OIL MIST | FUMES

CEILING SUSPENDED

ESPi 2000/4000 AAC

ELECTROSTATIC PRECIPITATOR

PURPOSE

Purified Air Ambient Air Cleaner (AAC) are designed to effectively capture airborne pollutants and maintain plant air quality below recommended exposure limits, providing a cost-effective solution for improved worker safety and reduced energy consumption.

PERFORMANCE

When properly installed and operated, the AAC can reduce airborne particulate by 80%, significantly improving overall air quality within the facility. By utilising the filtration of tempered air rather than exhausting contaminated air results in substantial savings on heating and cooling costs.

KEY FEATURES

- Filters Smoke Fumes & oil mist particles to sub-micron levels
- Tested to 99% efficiency
- Low operating costs no consumable filters
- Easy to install with minimal maintenance
- Designed to be suspended (above open applications)
- Energy efficient – uses no more than 540W / 1080W
- Reduces airborne particulate matter (PM) by up to 80%
- Compact design

HOW IT WORKS

Our ESP units fit in-line with the workshop ducting and can be configured modularly to cope with all extract volume requirements.

FILTERS REMOVE

Fumes

Oil mist

Emulsion Fumes

TECHNICAL SPECIFICATIONS

	ESPi 2000AAC	ESPi 4000AAC
Electrical Supply	220/240V / 1 / 50-60Hz	220/240V / 1 / 50-60Hz
Max Air Volume	up to 2000m³/h	up to 4000m³/h
Max Power Consumption	540w	1080w
Dimensions (mm)	W 609 mm	W 1059 mm
	H 670 mm	H 670 mm
	D 821 mm	D 821 mm
Weight (kg)	61kg	127kg

DRAWINGS

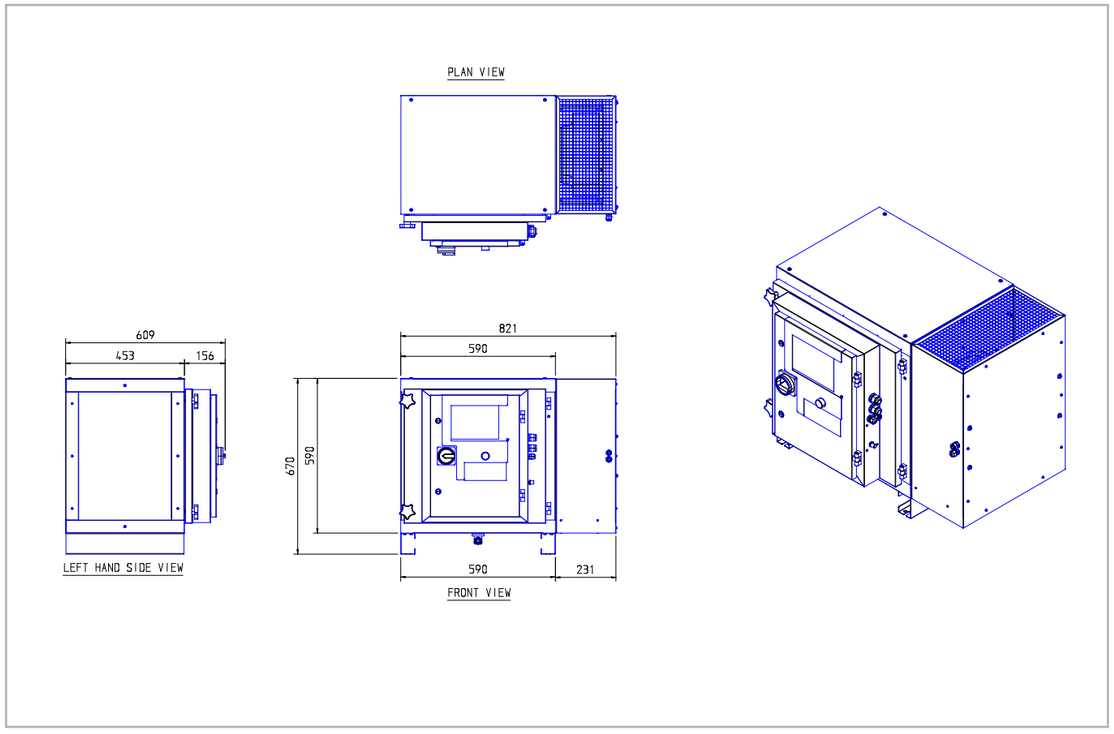

DUST | OIL MIST | FUMES

MACHINE MOUNTED

MFi 2500

3-STAGE MEDIA FILTRATION

Our media filtration (MFi) units utilises high-quality HEPA filtration to eliminate mist, smoke, and particulates produced during machine tooling processes with up to efficiency of up to 99.95%

Due to their modular design and integrated fan system, these units can be easily mounted on a machine tool using a free-standing stand or by connecting them for direct venting to the atmosphere.

These units are tailored to handle significant airflow volumes, making them ideal for larger, high-pressure neat oil machines. Their high efficiency makes them effective for most manufacturing processes.

KEY FEATURES

- Filters mist, fumes & smoke particles
- Multi-stage filtration inc. HEPA filter
- Up to 99.95% efficiency
- Easy to install with minimal maintenance
- Energy efficient: uses no more than 480W
- Compact design

FILTERS REMOVE

Fumes | Oil Smoke | Oil mist | Dust

HOW IT'S INSTALLED

Installations will be directed by the customer and can be either:

01 **Side Mounted** with gallows bracket

02 **Stand mounted** separate

MFi 2500 unit can only be directly mounted on larger machinery.

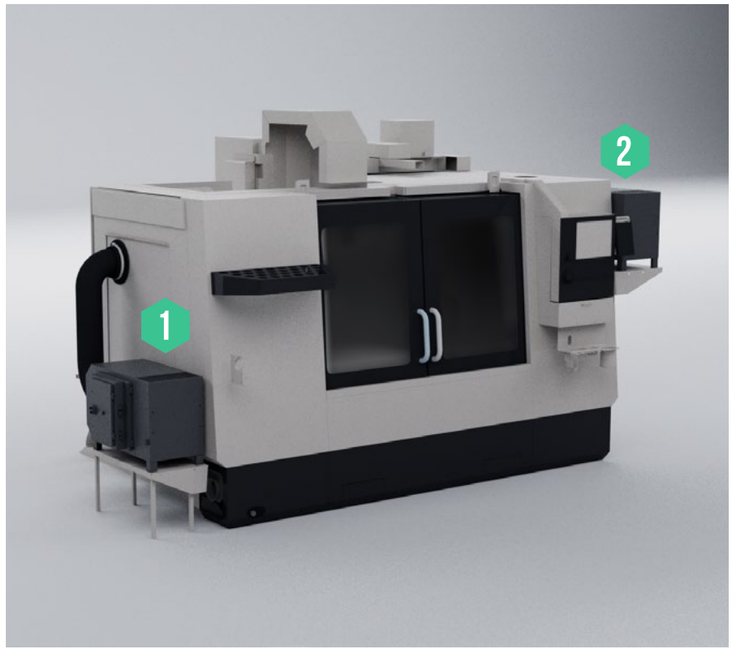

3-STAGE FILTRATION PROCESS

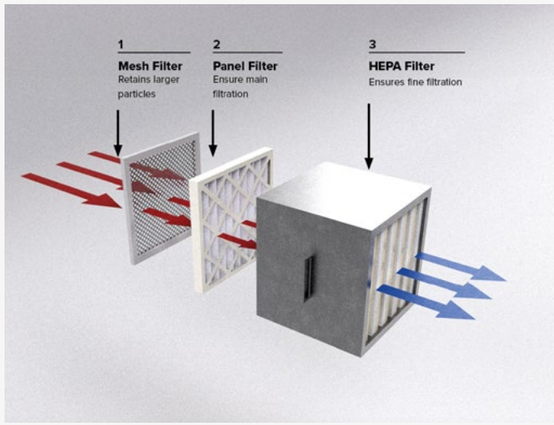

STAGE 1	**Wire Mesh Filter** Protects the main filter cell and coalesces the particulate matter
STAGE 2	**Panel Filter (G4)** Removes the larger particles
STAGE 3	**HEPA (H14)** filtering to submicron levels

TECHNICAL SPECIFICATION

	MFi 2500
Electrical Supply	220/240V / 1 / 50-60Hz
Max Air Volume	up to 2549m³/h
Max Power Consumption	480w
Dimensions (mm)	W 609 mm
	H 670 mm
	D 1081 mm
Weight (kg)	68kg

DRAWINGS

MFi 2500

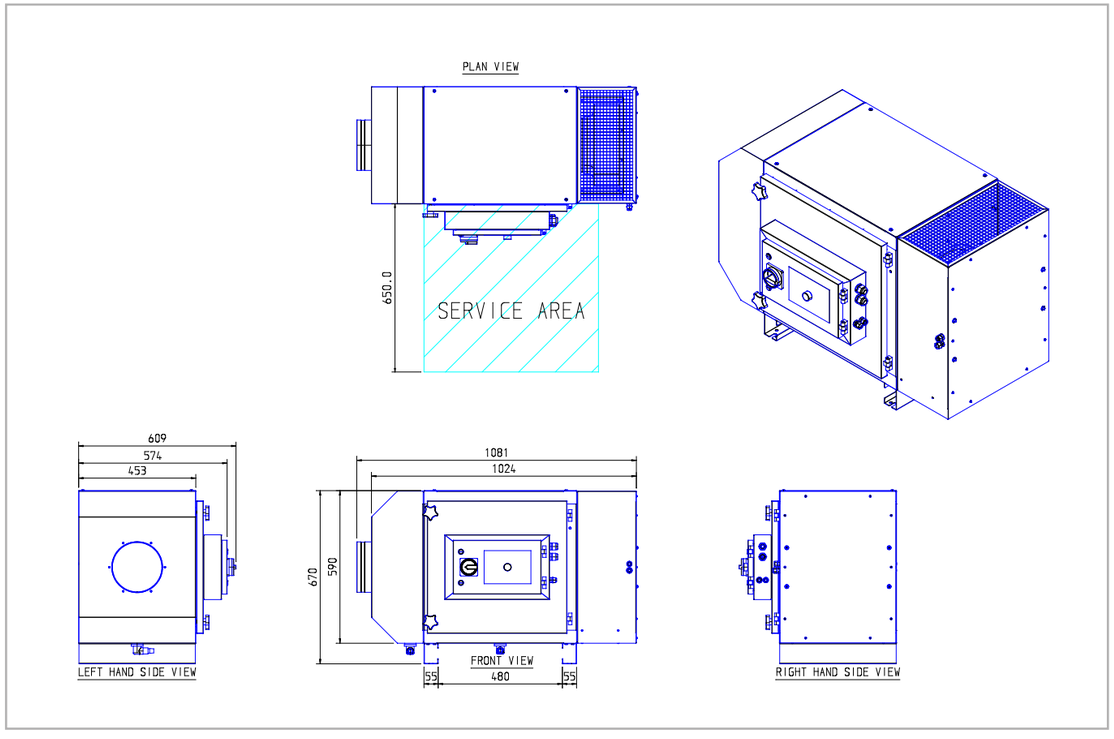

*access panel may differ depending on specification

ABOUT US

Purified Air's filtration products have been used by some of the world's largest brands since 1984.

In those 40 years we have developed a technology first approach allowing us to deliver highly efficient products supporting our partners in many different sectors, covering individual cellular extraction through to large turnkey projects. We are the only UK-based manufacturer of industrial/commercial electrostatic precipitators (ESPs). Modular, affordable, and scalable, our systems are unrivalled, with an efficiency of 99% down to 0.01µm.

UK MANUFACTURER

MARKET LEADERS SINCE 1984

WORLDWIDE COVERAGE

- United Kingdom
- Middle East
- Europe
- North America
- Asia
- Australasia

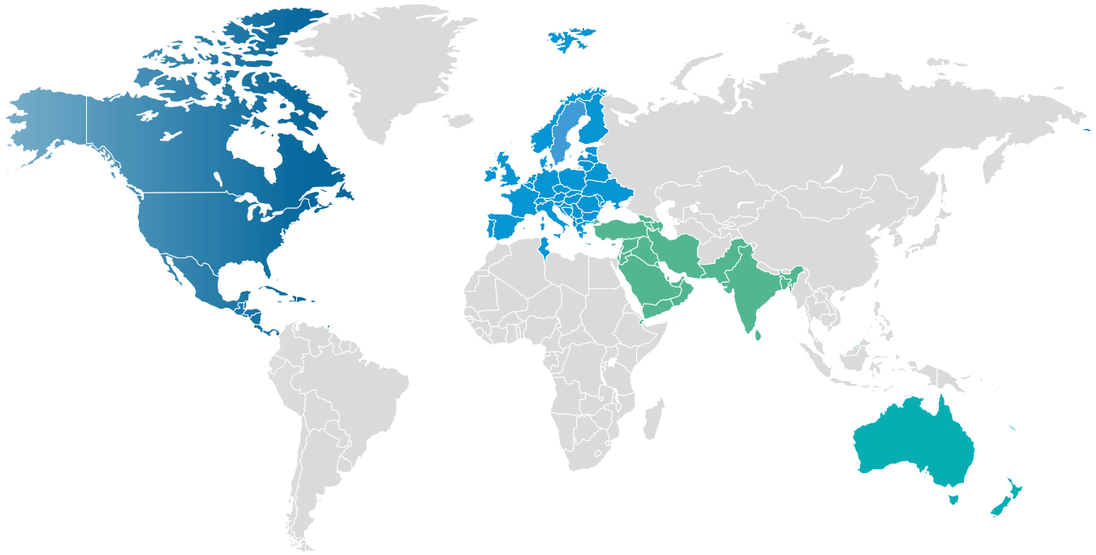

GET IN TOUCH

+44 (0) 1708 755 414
enq@purifiedair.com
Purified Air Limited, Lyon House
Lyon Road, Romford,
Essex RM1 2BG

purifiedair.com

purifiedair®

purifiedair.com